A Lock Nut

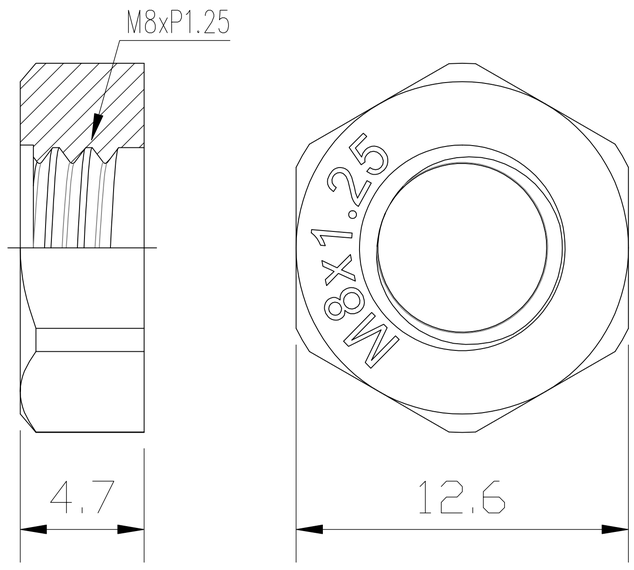

B Washer

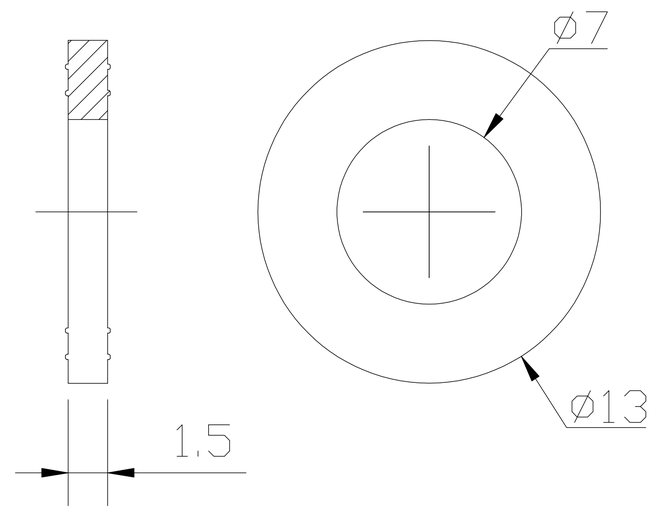

C Body

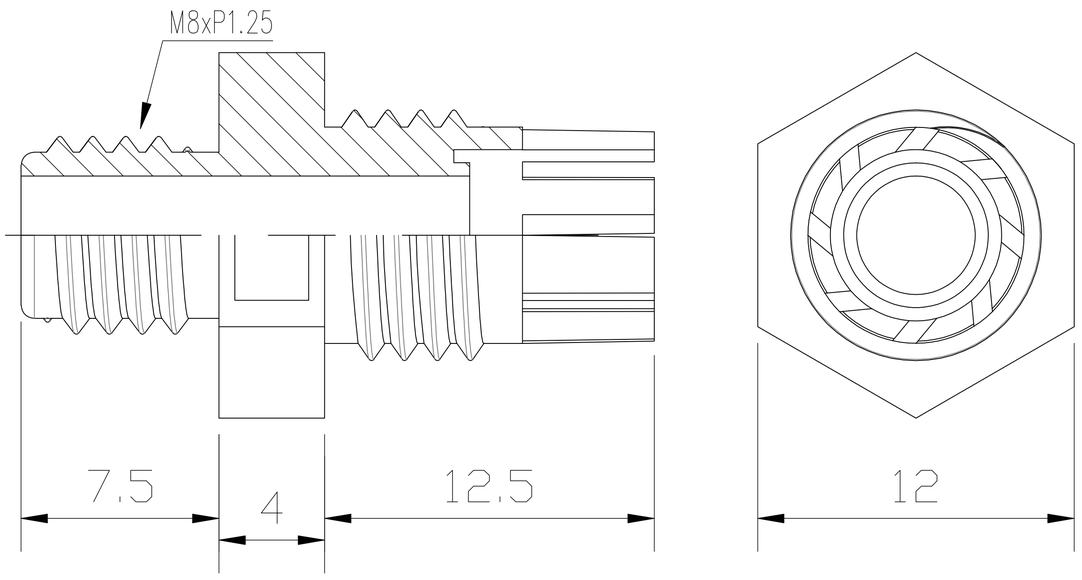

D Seal

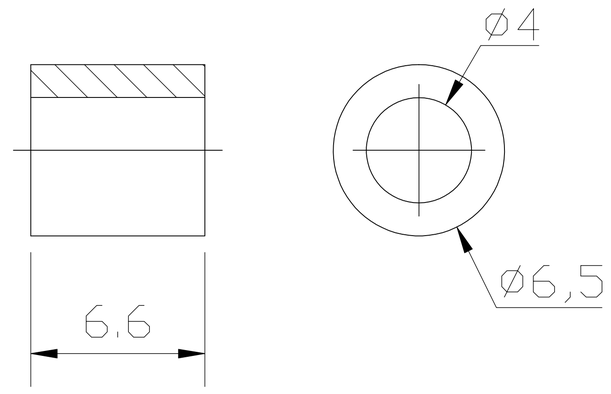

E Sealing Nut

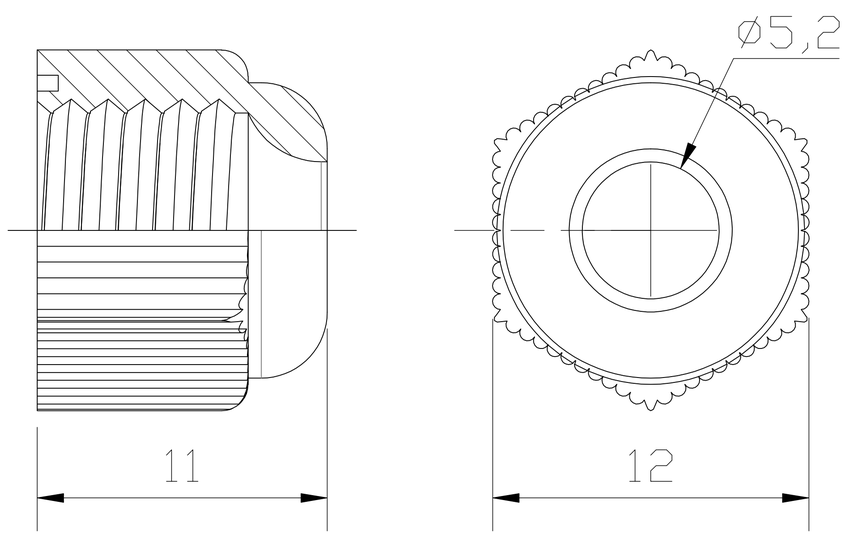

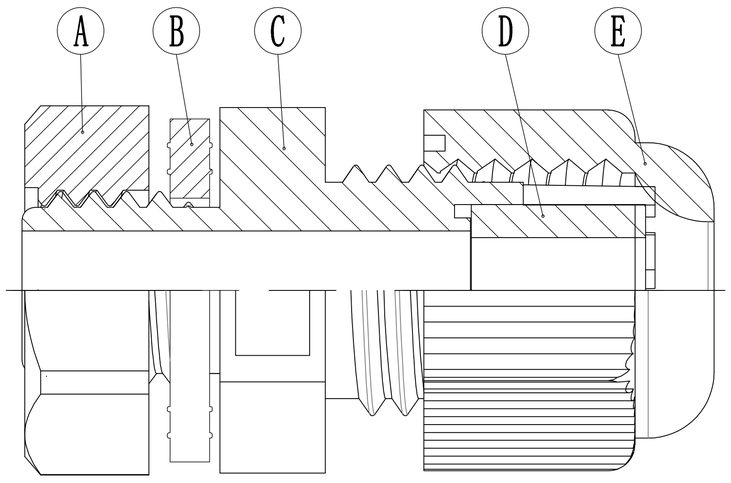

TOLERANCE: 6↓ ±0.2 18~30±0.5 6~9±0.3 30~50±0.6 9~18±0.4 50~80±0.8			B,D NBR A,C,E PA66 UL94V-2		荣伟电气有限公司
Design	黄玉仁	Standard		Model No: M8	P/N: D084575
Check		Unit	M M	Cable Range	2.5-4.5mm
Approve		Date	2021 12 21	Page 1 of 1	Scale 1:1

TJMD.008.575